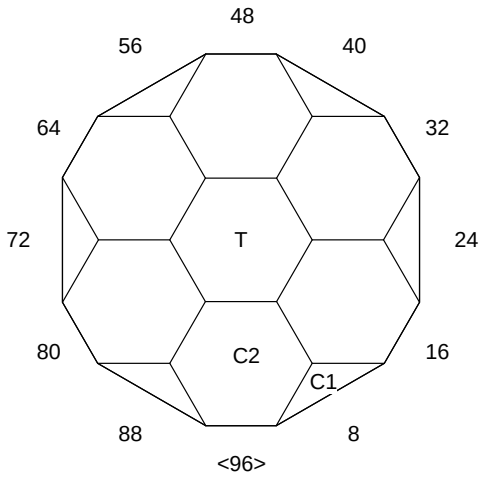

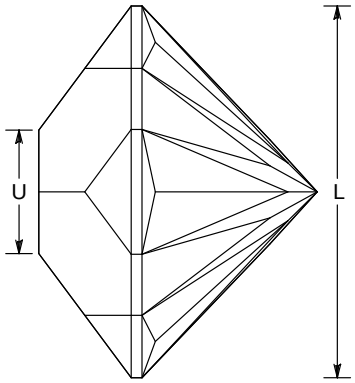

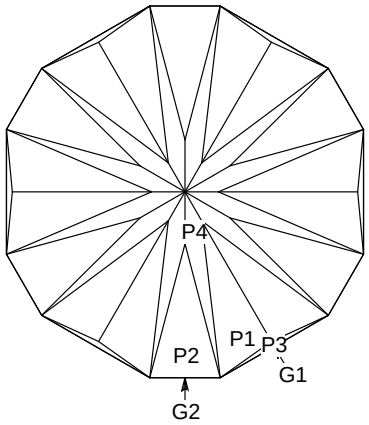

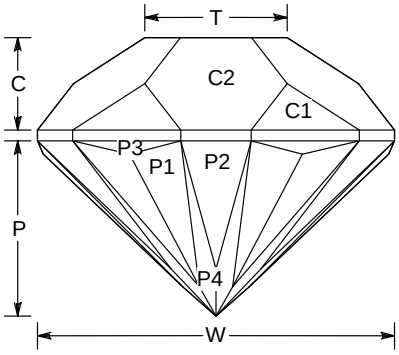

Gnome's Geode

Suite: Elemental Spirits
by Arya Akhavan (September 2012)
Angles for R.I. = 1.650
49 + 12 girdles = 61 facets
6-fold, mirror-image symmetry
96 index
L/W = 1.041 T/W = 0.399 U/W = 0.346
P/W = 0.491 C/W = 0.259
Vol./W³ = 0.279

PAVILION

P1	43.82°	06-10-22-26-38-42-54-58-70-74-86-90	Cut to centrepoint.
P2	43.72°	96-16-32-48-64-80	Meet at culet.
G1	90.00°	08-24-40-56-72-88	Set stone size.
G2	90.00°	96-16-32-48-64-80	Meet P1, P2, G1
P3	66.37°	08-24-40-56-72-88	Level girdle.
P4	42.81°	03-13-19-29-35-45-51-61-67-77-83-93	Meet P1, P2, G1, G2, P3

CROWN

C1	52.20°	08-24-40-56-72-88	Set girdle width.
C2	36.66°	96-16-32-48-64-80	Level girdle.
T	0.00°	Table	Float (cut even hexagons)

Honestly, I just wanted a crown that looked like a line-angle structure of hexanitrobenzene. I also like barion-ish pavilions on hexagons - this isn't quite a true barion pavilion, but it's close. Designed for peridot, but works in materials from feldspar to CZ (RI = 1.52 - 2.16) with no changes (also fluorite if you don't mind a window).
Suggested size = 8-10 mm
C:\PROGRA~2\GemCAD\DESIGN~3\GNOME'~1.GEM